WJK04

INDIVIDUAL HARDWARE

Download date : 2025-12-06

For reference only!version1.0
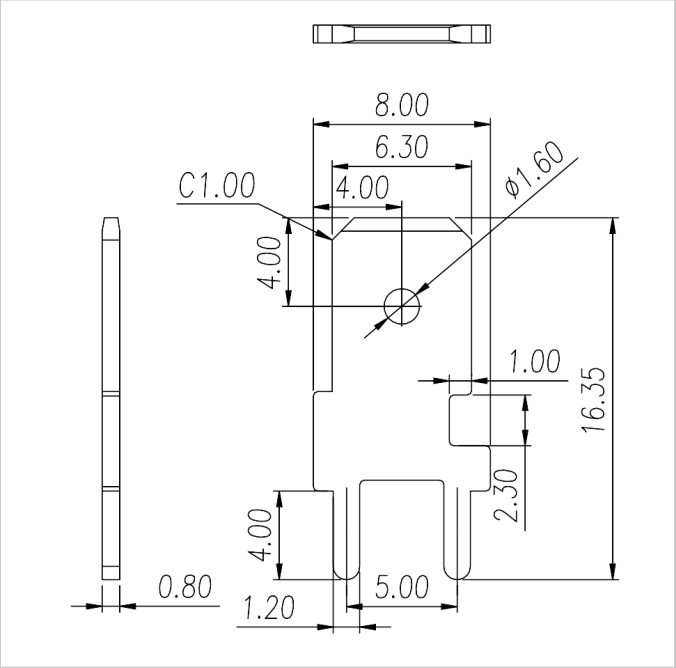
Dimensions