The catalog is for reference only. The actual specifications are subject to the product engineering drawings. version 1.0
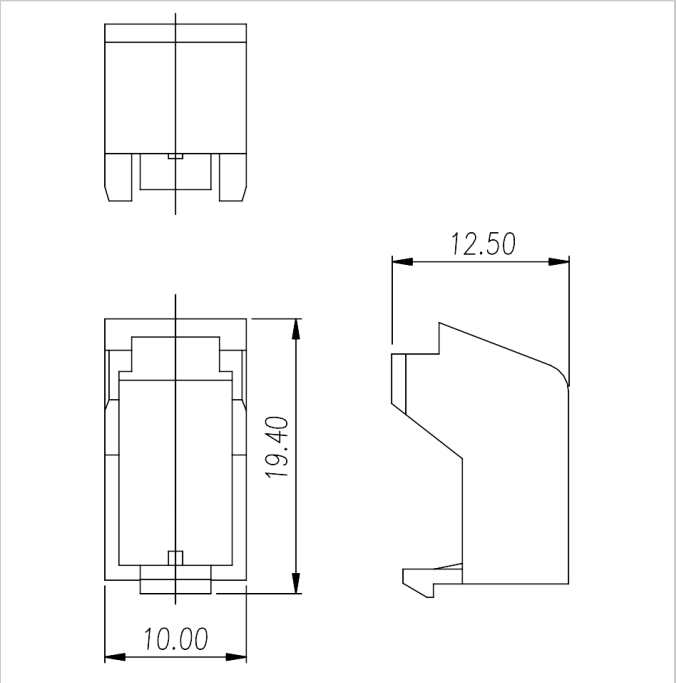
Dimensions