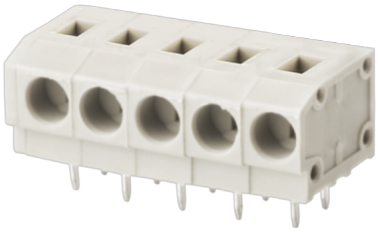

额定电流: 5A

额定电压: 300V

使用线径: 22-18AWG

间距:5.0mm

目录仅供参考，实际规格依产品工程图为准 版本1.0

技术数据-UL/CUL

等级 Use Group	B	C	D
额定电压 Rate Voltage [V]	300	-	300
额定电流 Rated Current [A]	5	-	5
接线范围 Wire Range [AWG]	22-18		
耐电压 Dielectric Voltage-Withstand	1.6KV		

技术参数-IEC

过电压类别 Overvoltage Category	III	III	II
污染等级 Contamination Class	3	2	2
额定电压 Rated Voltage [V]	250	320	630
额定电流 Rated Current [A]	17.5	17.5	17.5
额定冲击电压 Impulse withstand voltage [KV]	4	4	4

导线截面积[硬/柔] Conductor cross section [mm²]	0.5~1.5/0.75~1.5

材料 Material

绝缘材料 Insulation Material	PA66
阻燃等级 Flame relardant rating	UL94V-0
导体材料 Conductor Material	Copper alloy
导体表面镀层 Plating of conductor surface	Sn plated

一般参数 Other Date

间距/极数 Pitch/Poles [mm]/[P]	5.0/1-30
剥线长度 Stripping Length [mm]	9-10
螺丝/扭矩 Screw/Torque(Max)[N.m]	-
工作温度 Operating temperature [℃]	-40～+105
焊接方式 Soldering method	Wave soldering
引针尺寸 Pin dimensions [mm]	0.8*0.4
PCB板孔径 PCB Hole Diameter [mm]	□1.2

尺寸图

PCB开孔图

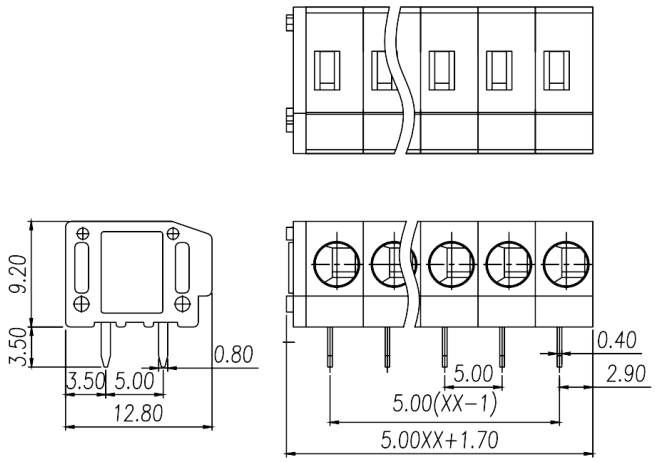
9.20
3.50
0.80
3.50
5.00
12.80
0.40
5.00
2.90
5.00(XX−1)
5.00XX+1.70

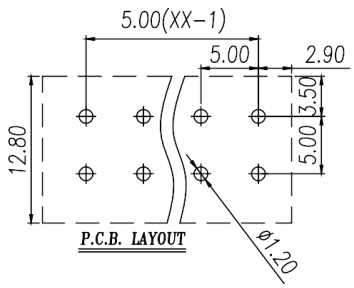
5.00(XX−1)
5.00
2.90
3.50
5.00
12.80
P.C.B. LAYOUT
Ø1.20