Transfer or duplication of this document as well as the utilization or communication of its contents are prohibited unless explicit authorization is granted. Violations will be liable for compensation. All rights reserved for patent, utility model or designs registrations. 除非给予明确授权，否则禁止转让、复制、利用、交流本文件的内容，侵犯者将负赔偿责任。本公司保留对涉及发明、实用新型和外观专利的所有权利。

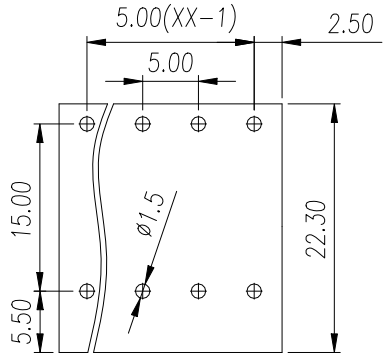

P.C.B. LAYOUT

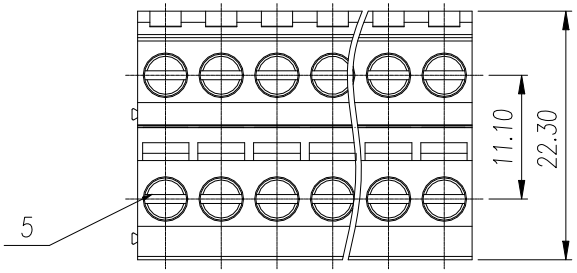

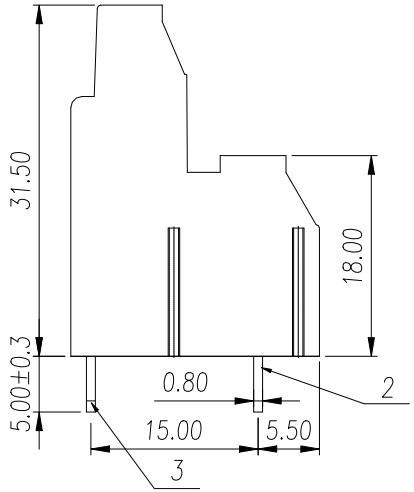

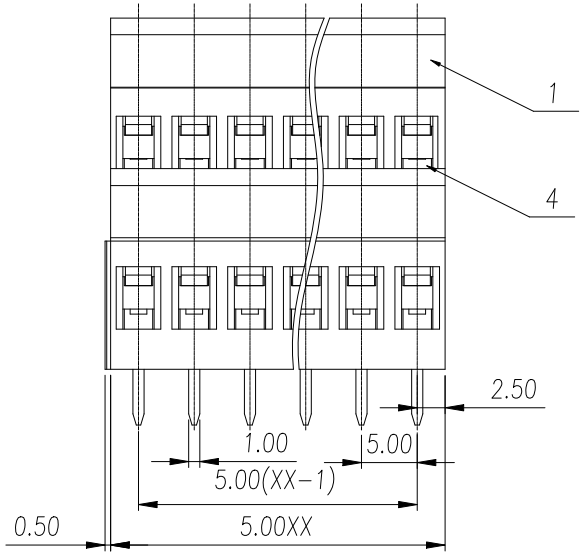

REVISION RECORD				
REV.	ESCRIPTION	ECN No.	APPROVED	DATE
V0	新发行		WangP	23.11.29

UL/CUL 技术参数 UL/CUL Technical Data			
等 级 Use Group	B	C	D
额定电压 Rated Voltage [V]	300	-	300
额定电流 Rated Current [A]	20	-	10
接线范围 Wire Range 单/多芯线 Solid/Stranded [AWG]	26-12		
耐电压 Withstanding Voltage	1600V/1Min		
IEC 技术参数 IEC Technical Data	IEC60947-7-4		
过电压类别 Overvoltage Category	III	III	II
污染等级 Contamination Class	3	2	2
额定电压 Rated Voltage [V]	250	400	630
额定电流 Rated Current [A]	20	20	20
额定冲击电压 Impulse withstand voltage [KV]	4.0	4.0	4.0
导线截面积 Conductor cross section 硬质/柔性导线 Solid/ flexible [mm²]	0.5-2.5		
一般参数 Other Data			
间距 Pitch /极数 Poles [mm] / [P]	5.0 / 2*02~2*24		
剥线长度 Stripping Length [mm]	6~7		
螺丝 Screw/扭矩 Torque(Max) [N.m]	M3/0.5		
工作温度 Operating temperature [°C]	-40~105		
焊锡温度 Soldering temperature	260°C/5S		

General Tolerances										
variable range	to 6	over 6 to 10	over 10 to 30	over 30 to 60	over 60 to 100	over 100 to 160	over 160 to	to 10	over 10 to 100	over 100 to
tolerance	±0.20	±0.30	±0.50	±0.70	±1.00	±1.30	±1.60	0.10	0.30	0.60

ITEM	NAME OF PART	MATERIAL	NOTES
5	Screw	Steel	M3/Zn Plated
4	Cage	Copper Alloy	M3/ Ni Plated
3	Header Pin	Copper Alloy	Sn Plated
2	Header Pin	Copper Alloy	Sn Plated
1	Housing	PA66	UL94V-0

DES.	WangP	DATE	23.11.29	UNITS	mm	THIRD ANGLE PROJECTION	
CHK.	YangHJ	DATE	23.11.29	SIZE	A4	TYPE: CUSTOMER DRAWING	SHEET 1 of 1
APP.	JASON	DATE	23.11.29	SCALE	1.5:1	DRAWING TYPE: SP-03	REV V0

WANJIE 慈溪市万捷电子有限公司 CIXI WANJIE ELECTRONIC CO., LTD

PART NO.: WJ130T2-5.0-2*XXP-1Y-00A