REVISION RECORD				
REV.	ESCRIPTION	ECN No.	APPROVED	DATE
V0	新发行		WangP	23.11.22

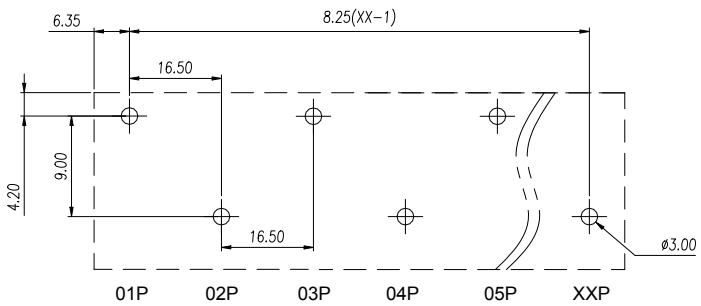

P.C.B. LAYOUT

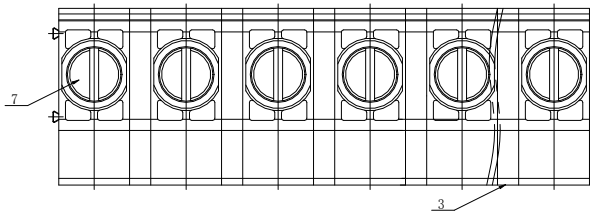

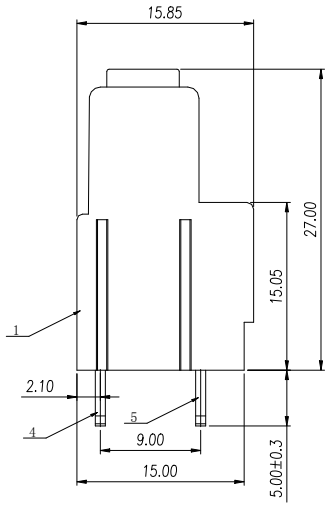

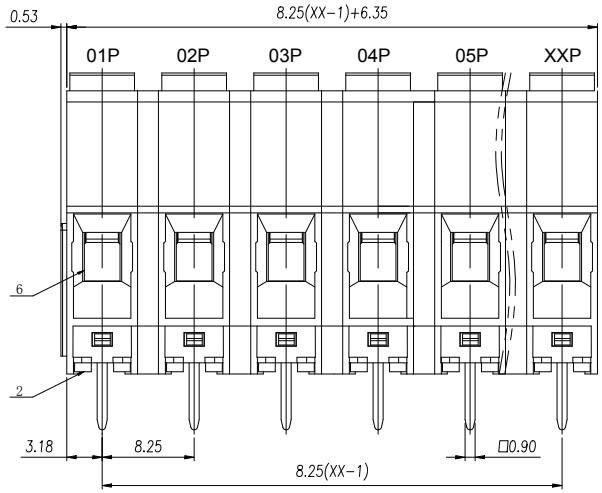

UL/CUL 技术 参数 UL/CUL Technical Data				
等 级	Use Group	B	C	D
额定电压	Rated Voltage [V]	600	600	600
额定电流	Rated Current [A]	30	30	5
接线范围 单/多芯线	Wire Range Solid/Stranded [AWG]	24-10		
耐电压	Withstanding Voltage	2200V/1Min		
IEC 技术参数 IEC Technical Data				
过电压类别	Overvoltage Category	III	III	II
污染等级	Contamination Class	3	2	2
额定电压	Rated Voltage [V]	800	1000	1000
额定电流	Rated Current [A]	41	41	41
额定冲击电压 Impulse withstand voltage	[KV]	8.0	8.0	8.0
导线截面积 硬质/柔性导线	Conductor cross section Solid/ flexible [mm²]	0.2-6.0		
一般参数	Other Data			
间距 Pitch /极数 Poles	[mm] / [P]	8.25/ 02~12		
剥线长度	Stripping Length [mm]	8		
螺丝 Screw/扭矩	Torque(Max) [N.m]	M3/0.5		
工作温度	Operating temperature [°C]	-40~105		
焊锡温度	Soldering temperature [°C]	260℃/5S		

General Tolerances								—	▱	⊥
variable range	to 6	over 6 to 10	over 10 to 30	over 30 to 60	over 60 to 100	over 100 to 160	over 160 to	to 10	over 10 to 100	over 100 to
tolerance	±0.20	±0.30	±0.50	±0.70	±1.00	±1.30	±1.60	0.10	0.30	0.60

ITEM	NAME OF PART	MATERIAL	NOTES
7	Screw	Steel	M3/Zn Plated
6	Cage	Copper Alloy	M3/ Ni Plated
5	Header Pin	Copper Alloy	Sn Plated
4	Header Pin	Copper Alloy	Sn Plated
3	Clapboard	PA66	UL94V-0
2	Cover	PA66	UL94V-0
1	Housing	PA66	UL94V-0

DES.	WangP	DATE	23.11.22	UNITS	mm	THIRD ANGLE PROJECTION			
CHK.	YangHJ	DATE	23.11.22	SIZE	A4	TYPE: CUSTOMER DRAWING	SHEET 1 of 1		
APP.	JASON	DATE	23.11.22	SCALE	1.5:1	DRAWING TYPE: SP-03	REV	V0	

WANJIE 慈溪市万捷电子有限公司 CIXI WANJIE ELECTRONIC CO., LTD

PART NO.: WJ635VK-8.25-XXP-1Y-00A

Transfer or duplication of this document as well as the utilization or communication of its contents are prohibited unless explicit authorization is granted. Violations will be liable for compensation. All rights reserved for patent, utility model or designs registrations. 除非给予明确授权，否则禁止转让、复制、利用、交流本文件的内容，侵犯者将负赔偿责任。本公司保留对涉及发明、实用新型和外观专利的所有权利。