Transfer or duplication of this document as well as the utilization or communication of its contents are prohibited unless explicit authorization is granted. Violations will be liable for compensation. All rights reserved for patent, utility model or designs registrations. 除非给予明确授权，否则禁止转让、复制、利用、交流本文件的内容。侵犯者将负赔偿责任。本公司保留对涉及发明、实用新型和外观专利的所有权利。

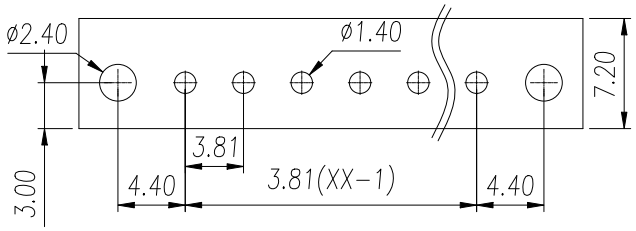


P.C.B. LAYOUT

| REVISION RECORD | | | | |
|---|---|---|---|---|
| REV. | ESCRIPTION | ECN No. | APPROVED | DATE |
| 0 | 新发行 | | YaoFei | 23.12.25 |

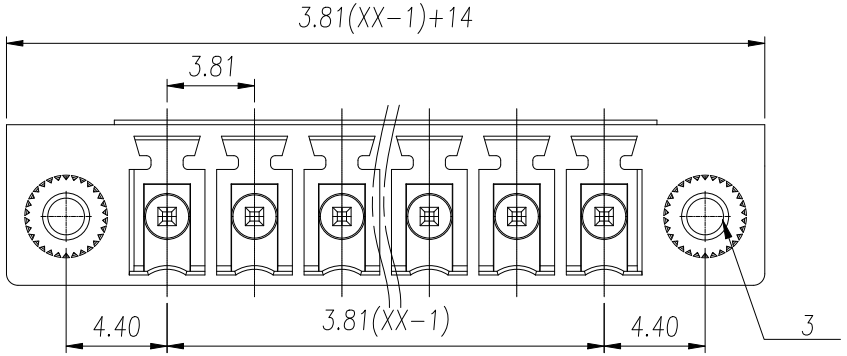


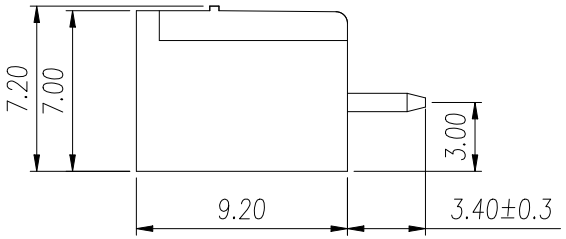


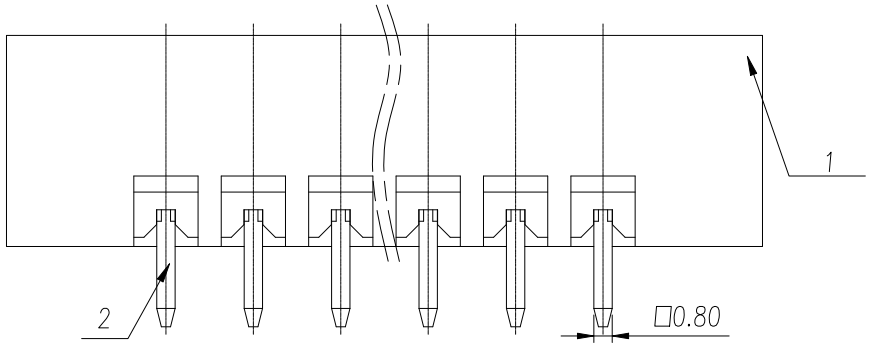


| UL/CUL 技术参数 UL/CUL Technical Data | | UL1059 | | |
|---|---|---|---|---|
| 等 级 | Use Group | B | C | D |
| 额定电压 | Rated Voltage [V] | 300 | - | 300 |
| 额定电流 | Rated Current [A] | 8 | - | 8 |
| 接线范围 单/多芯线 | Wire Range Solid/Stranded [AWG] | - | | |
| 耐电压 | Withstanding Voltage | 1600V/1Min | | |
| IEC 技术参数 IEC Technical Data | | IEC61984 | | |
| 过电压类别 | Overvoltage Category | III | III | II |
| 污染等级 | Contamination Class | 3 | 2 | 2 |
| 额定电压 | Rated Voltage [V] | 160 | 160 | 250 |
| 额定电流 | Rated Current [A] | 7 | 7 | 7 |
| 额定冲击电压 | Impulse withstand voltage [KV] | 2.5 | 2.5 | 2.5 |
| 导线截面积 硬质/柔性导线 | Conductor cross section Solid/ flexible [mm²] | - | | |
| 一般参数 | Other Data | | | |
| 间距 Pitch /极数 Poles | [mm] / [P] | 3.81 / 02~24 | | |
| 工作温度 | Operating temperature [°C] | -40~105 | | |
| 焊锡温度 | Soldering temperature | 260°C/5S | | |
| 引针尺寸 | Pin Dimensions [mm] | 0.8*0.8 | | |
| PCB板孔径 | PCB Hole Diameter [mm] | Ø1.4 | | |
| 符合RoHS环保要求 | | | | |

| General Tolerances | | | | | | | | — | ▱ | ⊥ |
|---|---|---|---|---|---|---|---|---|---|---|
| variable range | to 6 | over 6 to 10 | over 10 to 30 | over 30 to 60 | over 60 to 100 | over 100 to 160 | over 160 to | to 10 | over 10 to 100 | over 100 to |
| tolerance | ±0.20 | ±0.30 | ±0.50 | ±0.70 | ±1.00 | ±1.30 | ±1.60 | 0.10 | 0.30 | 0.60 |

| ITEM | NAME OF PART | MATERIAL | NOTES |
|---|---|---|---|
| 3 | Nut | Copper Alloy | M2.5 |
| 2 | Pin | Copper Alloy | Sn Plated |
| 1 | Housing | PA66 | UL94V-0 |

| | | | | | | | |
|---|---|---|---|---|---|---|---|
| DES. | YaoFei | DATE | 23.12.25 | UNITS | mm | THIRD ANGLE PROJECTION | |
| CHK. | YANGHJ | DATE | 23.12.25 | SIZE | A4 | TYPE: CUSTOMER DRAWING | SHEET 1 of 1 |
| APP. | JASON | DATE | 23.12.25 | SCALE | 3：1 | DRAWING TYPE: SP-03 | REV 0 |

WANJIE 慈溪市万捷电子有限公司 CIXI WANJIE ELECTRONIC CO., LTD

PART NO.: WJ15EDGVMG-3.81-XXP-1Y-00A

FOR-0371 Rev.1.0