Transfer or duplication of this document as well as the utilization or communication of its contents are prohibited unless explicit authorization is granted. Violations will be liable for compensation. All rights reserved for patent, utility model or designs registrations. 除非给予明确授权，否则禁止转让、复制、利用、交流本文件的内容，侵犯者将负赔偿责任。本公司保留对涉及发明、实用新型或外观专利的所有权利。

REVISION RECORD				
REV.	ESCRIPTION	ECN No.	APPROVED	DATE
V0	新发行		WangP	25.06.04

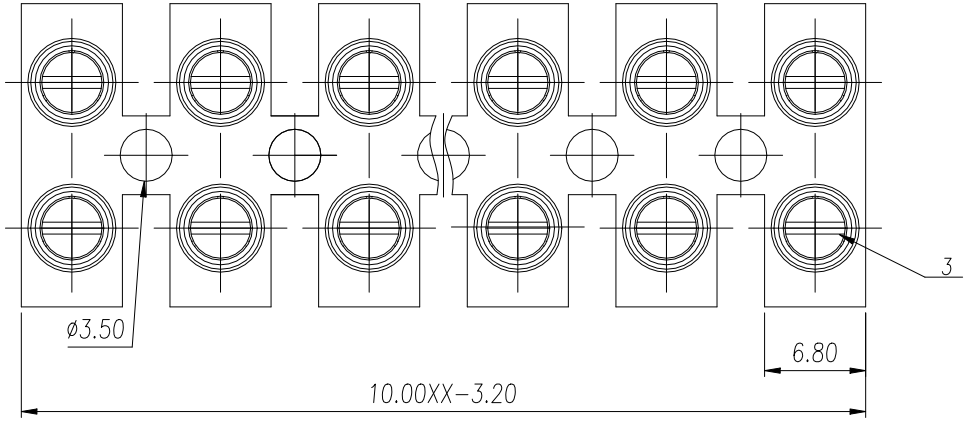

参考标准/ Standard	UL	IEC
额定电压/ Rated voltage	300V	450V
额定电流/ Rated current	30A	24A
接触电阻/ Contact resistance	20mΩ	
绝缘电阻/ Insulation resistance	500MΩ/DC500V	
使用线径/ Wire range	20~12AWG	2.5mm²
耐 电 压/ Wrth standing voltage	AC 1600V/1 Min	

机 械 性 能/ Mechanical

扭矩/ Torque	0.5Nm/4.5Lb.in/5.1Kgf.cm
温度范围/ Temp.Range	-40°C~+105°C
剥线长度/ Steip Length	7-8mm

尺 寸/ Dimensions

间 距/ Pitch	10.0mm
极 数/Poles	2~12p

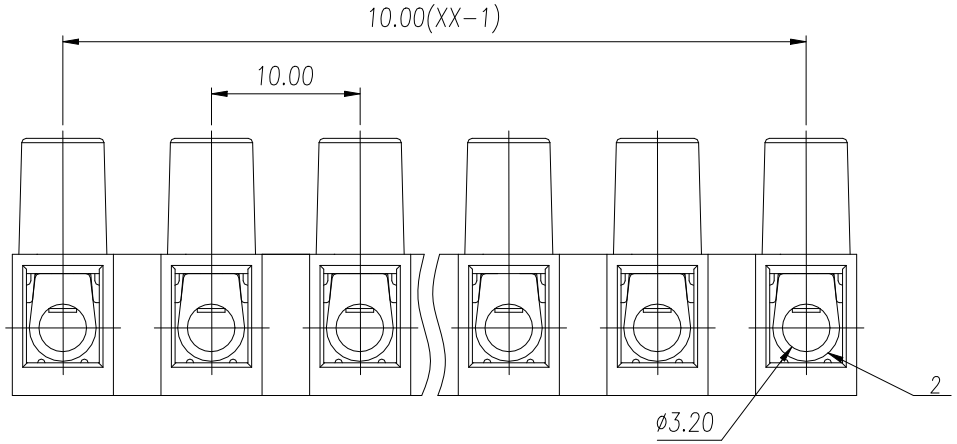

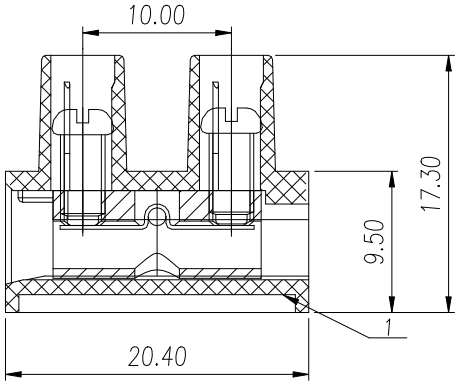

General Tolerances								—	▱	⊥
variable range	to 6	over 6 to 10	over 10 to 30	over 30 to 60	over 60 to 100	over 100 to 160	over 160 to	to 10	over 10 to 100	over 100 to
tolerance	±0.20	±0.30	±0.50	±0.70	±1.00	±1.30	±1.60	0.10	0.30	0.60

ITEM	NAME OF PART	MATERIAL	NOTES
3	Screw	Steel	M3
2	Cage	Copper Alloy	M3/Ni Plated
1	Housing	PA66	UL94V-2

DES.	WangP	DATE	25.06.04	UNITS	mm	THIRD ANGLE PROJECTION		
CHK.	YangHJ	DATE	25.06.04	SIZE	A4	TYPE: CUSTOMER DRAWING	SHEET 1 of 1	
APP.	JASON	DATE	25.06.04	SCALE	2:1	DRAWING TYPE: SP-03	REV	V0

WANJIE 慈溪市万捷电子有限公司 CIXI WANJIE ELECTRONIC CO., LTD

PART NO.: MY10HW-1.2-10.0-XXP-1Y-00A

FOR-0371 Rev.1.0