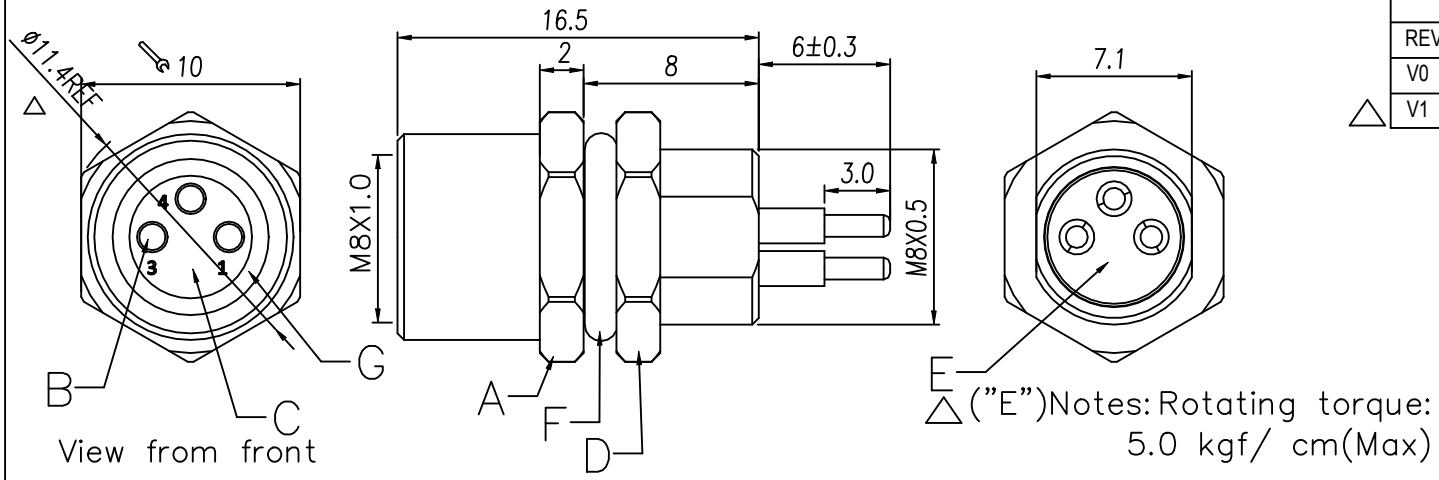

REVISION RECORD				
REV.	DESCRIPTION	ECN No.	APPROVED	DATE
V0	--			2022.06.27
V1	Add Notes			2024.11.25

IEC 技术参数 IEC Technical Data	IEC61076-2-104
工作温度 Operating temperatur [°C]	-25~+80
防护等级 IP Class (IN Locked condition)	IP67
额定电压 Rated Voltage [V]	
额定电流 Rated Current [A]	
导线截面积Conductor cross section 硬质/柔性导线 Solid/ flexible [mm²]	
接线范围 Wire Range 单/多芯线 Solid/Stranded [AWG]	PCB
材 料 Material	
绝缘材料 Insulation Material	PA 66
阻燃等级 Imflammability	UL94V-0
导体材料 Contactor Material	铜合金 Copper alloy
导体镀层 Contactive Coating	镀金 Gold Plated
螺母/螺丝Connector Nut/Screw	Brass With Nickel Plated铜镀镍
符合RoHS环保要求	

Contacts Pin数	3Pin	4Pin	5Pin	6Pin	8Pin
Coding编码	A-Coding	A-Coding	B-Coding	A-Coding	A-Coding
Rated Current 额定电流	3A	3A	3A	1.5A	1.5A
Rated Voltage 额定电压	60V	60V	30V	30V	30V
Pin Size导体直径	1.0mm	1.0mm	1.0mm	0.6mm	0.6mm
PART NO.品名:	M08-A03-ST0-F01-BH2	M08-A04-ST0-F01-BH2	M08-B05-ST0-F01-BH2	M08-A06-ST0-F01-BH2	M08-A08-ST0-F01-BH2
Custiomized.定制化:	.....	.....	.....	.....	.....

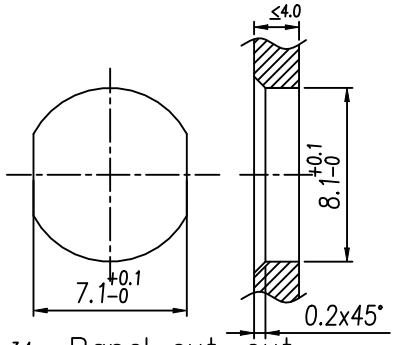

Panel cut-out

PCB Layout:

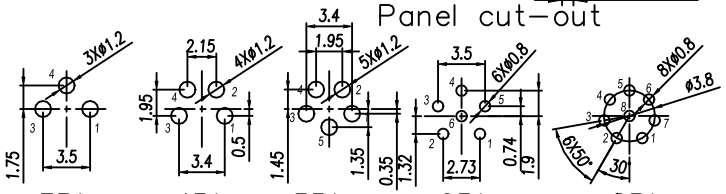

3Pin 4Pin 5Pin 6Pin 8Pin

编号 No.	料号 Materials.No	品名 Name	材 料 规 格 Description	单位 Unit	用量 Qty
G		O-Ring	O-Ring FKM Orange	pcs	1
F		O-Ring	O-Ring FKM Black	pcs	1
E		Resin	Black epoxy resin for sealing	g	1
D		Nut	Nut:M8X0.5,Brass With Nickel Plated	pcs	1
C		Housing	Housing Female,Black PA66	pcs	1
B		Terminal	Female Terminal ,Brass With Gold Plated	pcs	X
A		Screw	Screw M8X1.0,Brass With Nickel Plated	pcs	1

慈溪市万捷电子有限公司
CIXI WANJIE ELECTRONIC CO., LTD

PART NO.:(See Table)
M08-XXX-ST0-F01-BH2

NO SPECIFIED TOLERANCE			Cus' P/N:		Order No :	---	Drawing No.:	SP-02-M000XX
LINEAR	0.5~6	±0.1	DES.	Jun	DATE		UNITS	mm
	6~30	±0.2	CHK.		DATE		SIZE	A4
	>30	±2%	APP.		DATE		SCALE	X:X
ANGLES	±1°						THIRD ANGLE PROJECTION	PAGE 1 of 1

文件等级:外部公开